SERVICE MANUAL

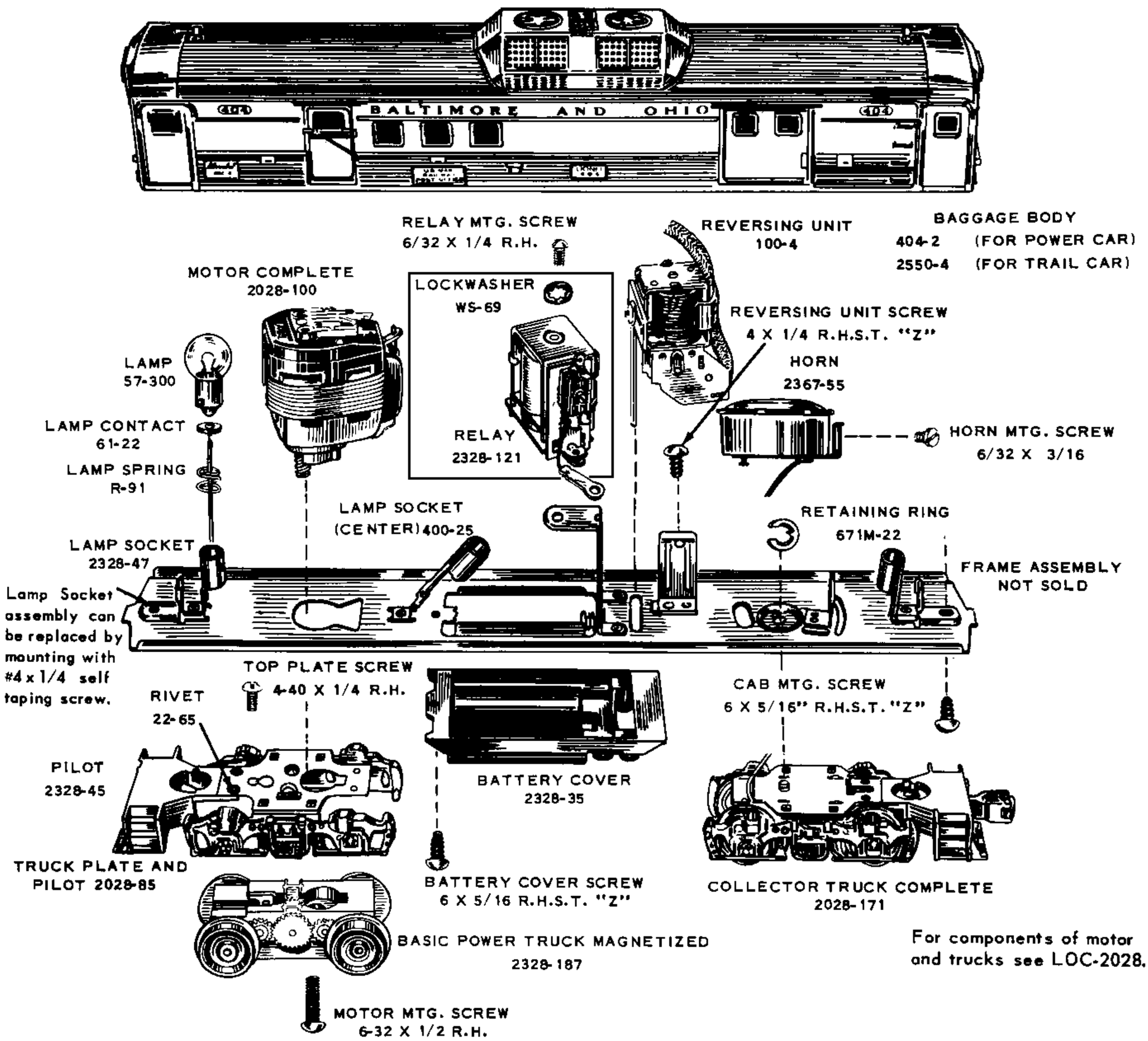

For components of motor and trucks see LOC-2028.
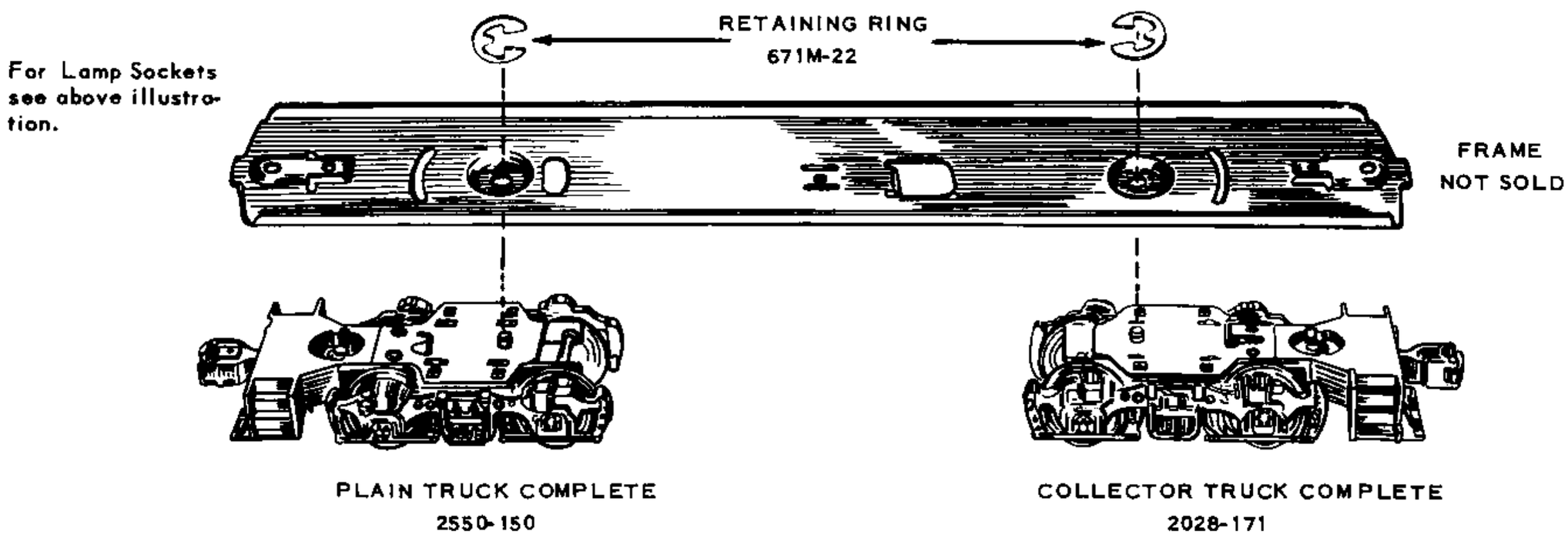
UNDER-CARRIAGE FOR TRAIL CARS